Drawing Number	REV
PPS-0310	A

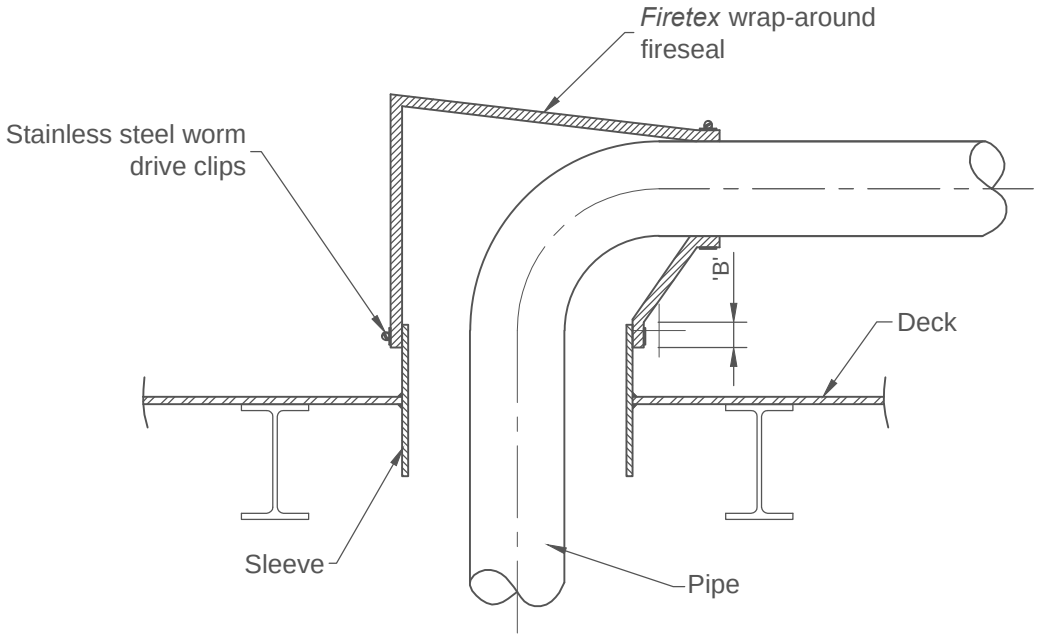

(SECTIONAL VIEW)

Notes:

MOVEMENT:	Seal design to suit specific project movement criteria.
CLIPPING:	Each seal is supplied with fitting instructions, adhesive and stainless steel worm drive clips to suit pipe and sleeve diameters. For diameters of 350mm and above 'double clipping' is required. The clipping length or cuff (B) is 50mm for single clips and 75mm for double clips.
GENERAL:	The deck penetration solution featured here may also be applied to a bulkhead penetration.

Drawing Title:

SPECIAL FIRETEX PIPE PENETRATION SEAL SYSTEM - 90 deg ELBOW

MCL UNITEX LTD
MCL House, Adams Close,
Heanor Gate Industrial Park,
Heanor, Derbyshire,
DE75 7SW
United Kingdom
Tel: +44 (0)1773 761226
Fax: +44 (0)1773 533478
Web: www.mclunitex.com

O05151

Rev	Date	Revision detail	Drn	Chk'd	App'd
A	02/06/10	Values updated	M.A.T.	J.D.	N.R.T.
0	26/09/05	Drawing created	J.D.	N.R.T.	I.C.K.

Drawing Number	REV
PPS-0310	A